The Ultimate in Fall Protection

ROOF TOP COUNTERWEIGHT ANCHOR SYSTEM 2100180 OR 2100185 WITH LIFTING KIT 2104190

USER INSTRUCTION MANUAL

Figure 1 - Assembled Roof Top Counterweight Anchor System with Lifting Kit

Important: *This instruction 5903698 must be used when assembling and using the Roof Top Counterweight Anchor System 2100180 (CE model) or 2100185 (ANSI/CSA model) in combination with Lifting Kit 2104190. Do not use instruction 5903602 or 5903726 which are intended for assembling and using the Roof Top Counterweight Anchor system 2100180 or 2100185 without Lifting Kit 2104190.*

If you intend to add the Lifting Kit 2104190 to an already-assembled Roof Top Counterweight Anchor System 2100180 or 2100185, the Roof Top Counterweight Anchor System must be completely disassembled and then reassembled by following this instruction 5903698.

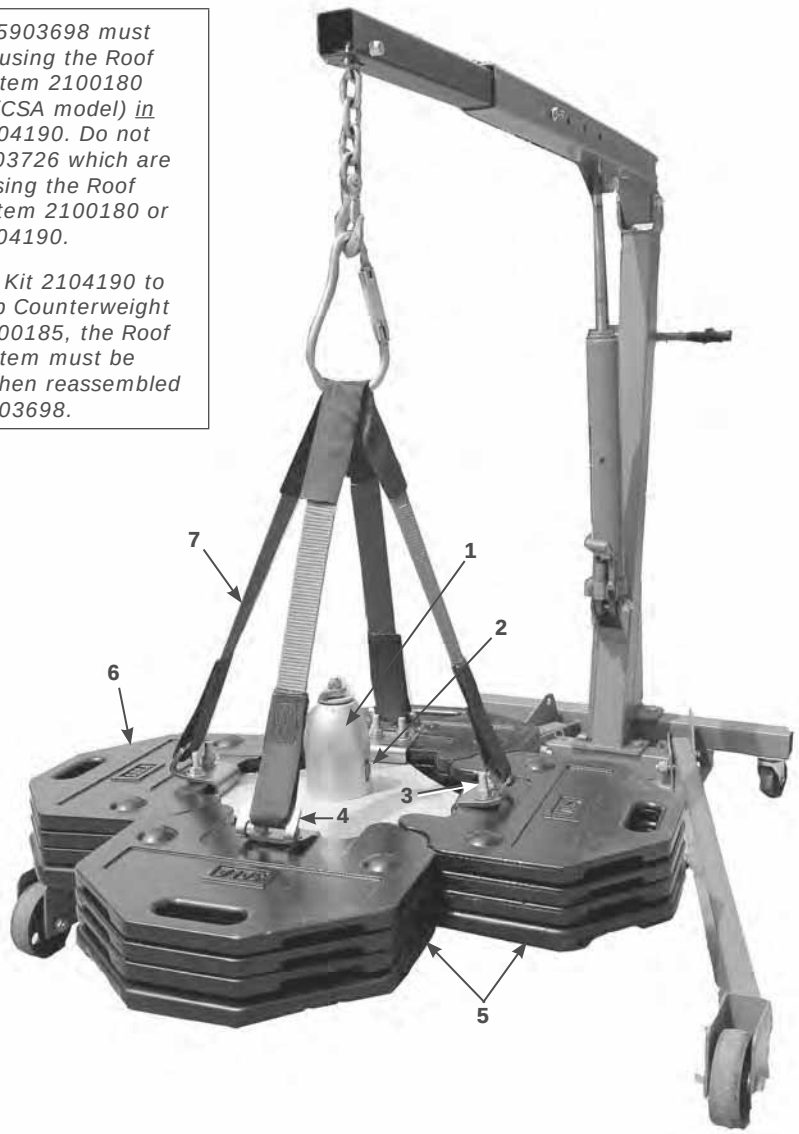

1 - Roof Top Anchor **2** - ID Label **3** - U-Bolts (4) **4** - Lifting Kit Bracket (4) **5** - Black Rubber Coated Base Weights
6 - Counterweights **7** - Lifting Kit Webbing (4)

WARNING: *These instructions must be provided to the user of this equipment. The user must read and understand these instructions before using this equipment. Manufacturer's instructions must be followed for proper use and maintenance of this equipment. The user must follow the manufacturer's instructions for each component of the system. Alterations or misuse of this product or failure to follow instructions may result in serious injury or death.*

IMPORTANT: *If you have questions on the use, care, or suitability of this equipment for your application, contact Capital Safety.*

IMPORTANT: *Prior to installation and use of this equipment, record the product identification information from the ID label in the Inspection and Maintenance Log at the back of this manual.*

FORM NO: 5903698
REV: B

1.0 PRODUCT APPLICATION

1.1 PURPOSE: The oo To o nter ei ht nchor tem i e i ne or e a an anchorin mean or a er onal all arrest system (PFAS) for a person working on flat roofs or structures. The Lifting Kit is designed to allow transport of a fully assembled Roof Top Counterweight Anchor System between locations on a job site. It is not intended for transport of anchor systems beyond a job site or for movement of any other equipment or material.

> *WARNING: Unless otherwise noted, Capital Safety equipment is designed for use with Capital Safety approved components and subsystems only. Substitution or replacement with non-approved components or subsystems may jeopardize compatibility of equipment and may affect safety and reliability of the complete system. Do not hang, lift, or support tools or equipment from the Anchorage System, or attach guy lines for antennas, phone lines, etc.*

1.2 SUPERVISION: Installation of this equipment must be supervised by a Qualified Person . Use of this equipment must be er i e a om etent Per on .

1.3 TRAINING: This equipment must be installed and used by persons trained in its correct application. This manual is to be used as part of an employee training program as required by OSHA. It is the responsibility of the users and installers of thi e i ment to en re the are amiliar ith the e in tr ction traine in the correct care an e o thi e i ment an are a are o the o eratin characteri tic a lication limitation an con e ence o im ro er e o thi equipment.

> *IMPORTANT: Training must be conducted without exposing the user to a fall hazard. Training should be repeated periodically.*

1.4 RESCUE PLAN: hen in thi e i ment an connectin tem the em lo er m t ha e a re c e lan an the mean at han to im lement an comm nicate that lan to er thori e Per on an e c er . A trained, on-site rescue team is recommended. Team members should be provided with the equipment and techniques to perform a successful rescue. Training should be provided on a periodic basis to ensure rescuer proficiency.

1.5 INSPECTION FREQUENCY: The oo To o nter ei ht nchor tem hall e in ecte the er e ore each e an a itionall a om etent Per on other than the er at inter al o no more than one ear . Inspection procedures are described in Section 5 of this manual. Results of each Competent Person inspection should be recorded in the "*Inspection and Maintenance Log*" in this manual.

1.6 AFTER A FALL: If the Roof Top Counterweight Anchor System is subjected to the forces of arresting a fall, it must be removed from the field of service immediately and replaced or inspected by an Authorized Capital Safety Representative.

1.7 LIMITATIONS: The following limits apply to the installation and use of Roof Top Counterweight Anchor System. Other limitation ma a l

- **A. HORIZONTAL LIFELINE:** The oo To o nter ei ht nchor tem i not rate or e a an anchor or a horizontal lifeline.
- **B. SYSTEM CAPACITY:** The ma im m ca acit o the oo To o nter ei ht nchor tem i one er on ith a maximum combined weight including tools and clothing, of 310 lbs. (141 kg).
- **C. ROOF TYPES:** The oo To o nter ei ht nchor tem i a ro e or e on the ollo in t e o roo concrete, asphalt sanded, and asphalt stone chippings. If you want to use the system on any other type of roofing surface, contact DBI-SALA for further recommendations.
- **D. ROOF LOAD:** The roof must be able to support a static load of 720 lbs.
- **E. ROOF CONDITIONS:** The Roof Top Counterweight Anchor System must not be used in adverse weather conditions. The roo r ace m t e ree o ro t no tan in ater rea e or oil or an other t e o l ricatin or riction reducing materials.
- **F. PERSONAL FALL ARREST SYSTEM:** PF e ith thi roo anchor m t meet a lica le tate e eral and ANSI requirements. PFASs incorporating a full body harness must be capable of arresting a worker's fall with a maximum arresting force of no greater than 1,800 lbs. (8 kN) and limit the free fall distance to 6 ft. (1.8 m) or less. The deceleration distance for a PFAS must be 42 inches (1.1 m) or less (47 inches (1.2 m) in Canada). Reference ANSI Z359.1, OSHA and CSA Z259.11 requirements. The system must be rigged in a way that limits free fall to 6 ft. or less. Contact DBI-SALA if you have questions or concerns regarding free fall limits.
- **G. ENVIRONMENTAL HAZARDS:** Use of this equipment in areas where environmental hazards exist may require additional precautions be taken to reduce the possibility of injury to the user or damage to the equipment. Hazards ma incl e t are not limite to hi h heat e treme col ca tic chemical corro i e en ironment hi h olta e power lines, explosive or toxic gases, moving machinery, or sharp edges. Contact DBI-SALA if you have questions about using this equipment where environmental hazards exist.

---

1 ***Qualified Person:*** *A person with a recognized degree or professional certificate and with extensive knowledge, training, and experience in the fall protection and rescue field who is capable of designing, analyzing, evaluating, and specifying fall protections and rescue systems to the extent required by OSHA and other applicable standards.*

2 ***Competent Person:*** *One who is capable of identifying existing and predictable hazards in the surroundings or working conditions which are unsanitary, hazardous, or dangerous to employees, and who has authorization to take prompt corrective measures to eliminate them.*

3 ***Authorized Person:*** *For purposes of the Z359 standards, a person assigned by the employer to perform duties at a location where the person will be exposed to a fall hazard.*

4 ***Rescuer:*** *Person or persons other than the rescue subject acting to perform an assisted rescue by operation of a rescue system.*

5 ***Inspection Frequency:*** *Extreme working conditions (harsh environments, prolonged use, etc.)may require increasing the frequency of competent person inspections.*

2.0 SYSTEM REQUIREMENTS

2.1 CONNECTOR COMPATIBILITY: onnector are con i ere to e com ati le ith connectin element hen the ha e een e i ne to or to ether in ch a a that their i e an ha e o not ca e their ate mechani m to inadvertently open regardless of how they become oriented. Contact Capital Safety if you have any questions about compatibility.

Connectors (hooks, carabiners, and D-rings) must be capable of supporting at least 5,000 lbs. (22.2 kN). Connectors must be compatible with the anchorage or other system components. Do not use equipment that is not compatible. Non-compatible connectors may unintentionally disengage (see Figure 2). If the connecting element to which a snap hook or cara iner attache i n er i e or irre lar in ha e a it ation co l occ r here the connectin element a lie a orce to the gate of the snap hook or carabiner (Figure 2, A). This force may cause the gate to open (Figure 2, B), allowing the snap hook or carabiner to disengage from the connecting point (Figure 2, C).

Self-locking snap hooks and carabiners are required by ANSI Z359, OSHA and CSA Z259.12 in Canada.

2.2 MAKING CONNECTIONS: Snap hooks and carabiners used with this equipment must be self-locking. Ensure all connections are compatible in size, shape and strength. Do not use equipment that is not compatible. Ensure all connectors are fully closed and locked.

Capital Safety connectors (snap hooks and carabiners) are designed to be used only as specified in each product's user's instructions.

Examples of inappropriate connections are shown in Figure 3. Do not connect snap hooks and carabiners:

A. To a D-ring to which another connector is attached.

B. In a manner that would result in a load on the gate.

> *NOTE: Large throat snap hooks should not be connected to standard size D-rings or similar objects which will result in a load on the gate if the hook or D-ring twists or rotates, unless the snap hook complies is equipped with a 3,600 lb (16 kN) gate. Check the marking on your snap hook to verify that it is appropriate for your application.*

C. In a false engagement, where features that protrude from the snap hook or carabiner catch on the anchor, and without visual confirmation seems to be fully engaged to the anchor point.

D. To each other.

E. Directly to webbing or rope lanyard or tie-back (unless the manufacturer's instructions for both the lanyard and connector specifically allows such a connection).

F. To an o ect hich i ha e or imen ione ch that the na hoo or cara iner ill not clo e an loc or that roll-out could occur.

G. In a manner that does not allow the connector to align properly while under load.

Figure 2 - Unintentional Disengagement

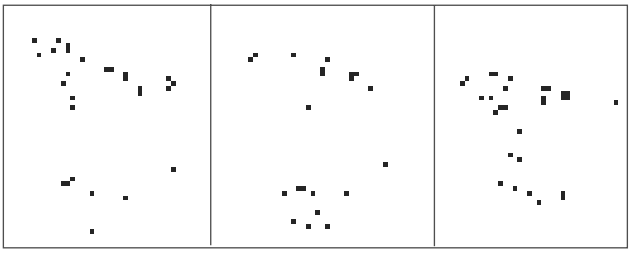

Figure 3 - Inappropriate Connections

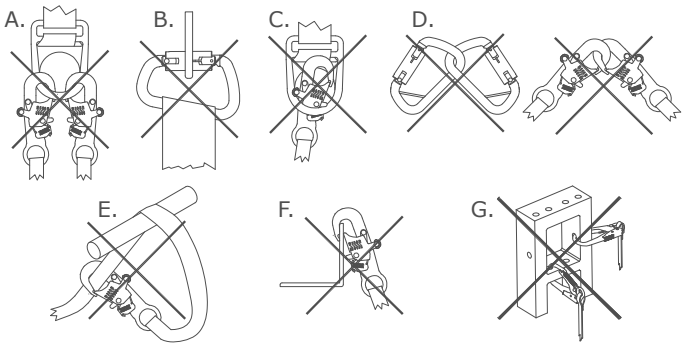

2.3 STRUCTURE LOAD: The structure supporting these anchorage points must be rigid, flat pitch, and capable of supporting at least 5,000 lbs. (22.2 kN) in the direction of potential fall arrest.

.0 ASSEM LY AND USE

WARNING: Do not alter or intentionally misuse this equipment. Consult with D I-SALA if using the oof Top Counterweight Anchor System in combination with components or subsystems other than those described in this manual. Some subsystems and components combinations may interfere with the proper operation of this equipment. Use caution when using this equipment around moving machinery, electrical and chemical hazards, and sharp edges.

WARNING: or ing at height has inherent ris s. Some ris s are noted here but are not limited to the following falling, suspension prolonged suspension, stri ing objects, and unconsciousness. In the event of a fall arrest and or subsequent rescue (emergency) situation, some personal medical conditions may affect your safety. Medical conditions identified as risky for this type of activity include but are not limited to the following heart disease, high blood pressure, vertigo, epilepsy, drug or alcohol dependence, psychiatric illness, impaired limb function and balance issues. e recommend that your employer physician determine if you are fit to handle normal and emergency use of this equipment.

3.1 BEFORE EACH USE in ect thi e i ment accor in to te li te in ection o not e the oo To o nter ei ht nchor tem i in ection re eal an n a e or e ecti e con ition Plan o r e o the all rotection tem rior to e o in or er to an ero it ation on i er all actor a ectin o r a et e ore in thi tem

A. ea an n er tan all man act rer in tr ction or each com onent o the er onal all arre t tem ll harne e an connectin tem are lie ith e arate er in tr ction ee all in tr ction or t re re erence

B. e ie ection an to en re tem limitation an other re irement ha e een a here to e ie a lica le in ormation re ar in tem clearance criteria an en re chan e ha e not een ma e to the tem in tallation i e len th or occ rre at the o ite that co l a ect the re ire all clearance o not e the tem i chan e are re ire

3.2 PLAN o r all arre t tem e ore tartin o r or Ta e into con i eration actor a ectin o r a et at an time rin e The ollo in li t i e ome im ortant oint o m t con i er hen lannin o r tem

A. ANCHORAGE: elect an anchora e oint that i ri i an ca a le o ortin the re ire loa ee ection ocate the roo anchor in accor ance ith ection

B. OTHER CONSIDERATIONS:

- Place the oo To o nter ei ht nchor tem at lea t t m a a rom an e e or o enin ee Fi re
- Personal fall arrest systems must e ri e to limit an ree all to a ma im m o t m an ee ection F
- Avoid working above your anchorage le el ince an increa e ree all i tance ill re lt
- Avoid working where your line may cross or tan le ith that o another or er or another o ect
- Do not allow the lifeline to pass under arm or et een le
- Never clamp, knot or otherwise prevent the li eline rom retractin or ein ta t a oi lac line

Figure 4 - Counter eig t S stem Positioning

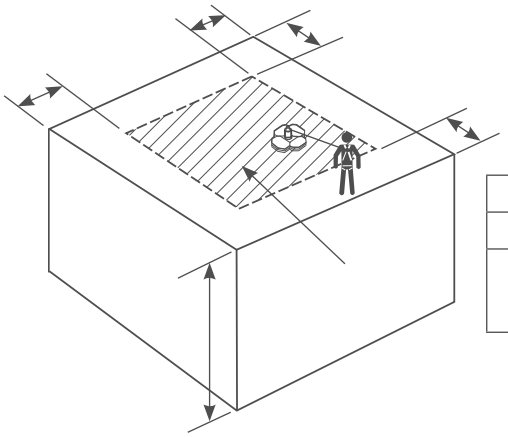

	t m
	learance t m min
	oo To o nter ei ht nchor tem o itionin one

IMPORTANT: Do not lengthen the S L by connecting a lanyard or similar component without consulting D I-SALA.

C. TOTAL FALL DISTANCE: ho l a all occ r there m t e at lea t t o clearance in the all area to arre t the all e ore tri in the ro n or other o ect ee Fi re The total all i tance i the i tance mea re rom the on et o a all to the oint here the all i arre te n m er o actor can in l ence the total all i tance incl in er ei ht anchora e location relati e to the all in all o ort ith li in rin an the t e o all arre t e i ment o attach to the oo To o nter ei ht nchor tem U er m t a t m into all clearance calc lation to acco nt or an mo ement in the co nter ei ht anchor a e hile arre tin a all For eci ic clearance re irement rea an ollo the man act rer in tr ction or o r all arre t e i ment

D. S ING FALLS: ee Fi re in all occ r hen the anchora e oint i not irectl a o e the oint here a all occ r The orce o tri in an o ect hile in in hori ontal ee o the er e to the en l m a ect can e reat an ma ca e erio in r in all can e minimi e or in a clo e to the anchora e oint a o i le n a in all it ation the total ertical all i tance o the er ill e reater than i the er ha allen erticall irectl elo the anchora e oint The er m t there ore acco nt or an increa e in the total ree all i tance an the area nee e to a el arre t the all

The i a lica le ill acti ate loc re ar le o it orientation an location relati e to the er o ition ho e er a commonl ollo e i eline i or a irectl et een the anchora e oint an roo e e a o i le o not ca ti ate the li eline o an it ma a ect the er ormance o it ra in a in all ha ar e i t in o r a lication contact e ore rocee in

Figure 5 - S ing Falls

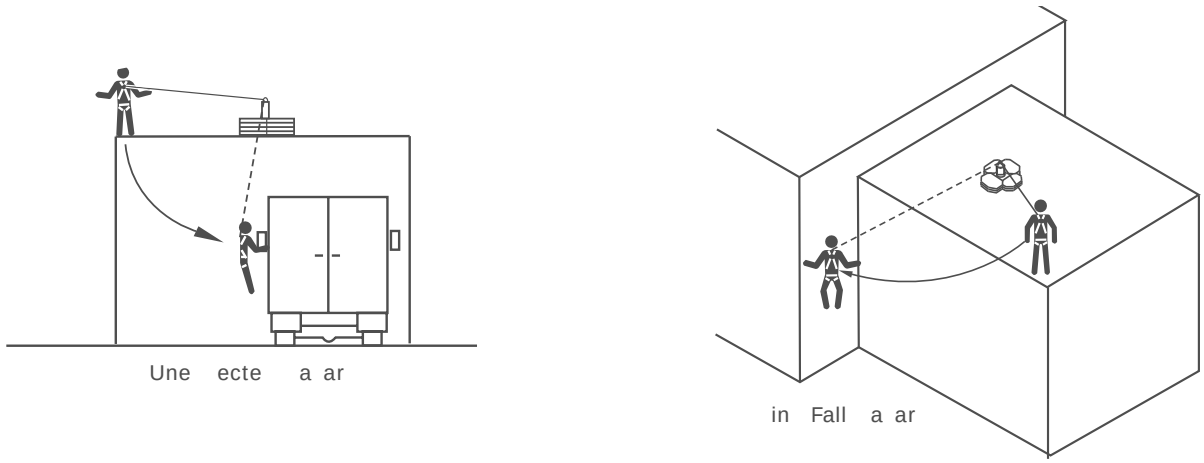

E. SHARP EDGES: oi or in here the connectin tem i e ll o harne lan ar li eline etc or other tem com onent ill e in contact ith or a ra e a ain t n rotecte har e e ee Fi re or in ith thi e i ment near har e e i na oi a le rotection a ain t c ttin m t e ro i e in a hea a or other mean o er the e o e har e e o are not in a ea in e it i recommen e that an ener a or er P e in talle in line et een the harne an the el retractin li eline to rther rotect the or er om ati ilit an total all i tance i e m t e con i ere i thi i one ontact e ore in in line ener a or in com onent or lan ar ith el retractin li eline

Figure 6 - S arp E ges

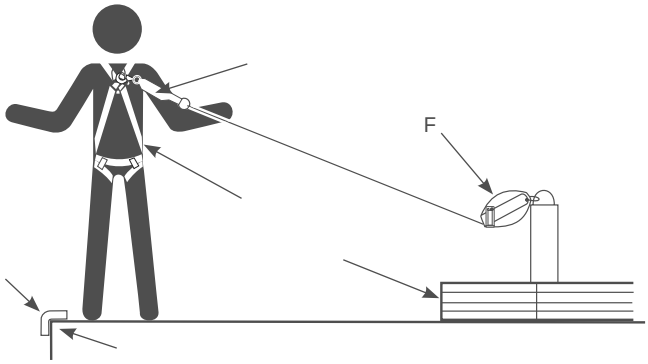

	har e		F ll o arne
	Pa in		oo To o nter ei ht nchor tem
	n line hoc or er	F	

WARNING: ead and follow the manufacturer s instructions for associated equipment i.e. S L, full body harness, lanyard, lifeline, etc. used in your personal fall arrest system.

3.3 SYSTEM ASSEMBLY: Fi re ho the a em le oo To o nter ei ht nchor tem ith i tin it

Step 1. Determine a suitable location for assembly of the Roof Top Counterweight Anchor System. It must be flat and at lea t t m a a rom the e e o the tr ct re or an o enin ch a li ht ee Fi re

Step 2. Sweep the installation location to remove loose materials. Lay out four rubber coated base weights on the flat r ace a ho n in Fi re U olt ill e in erte thro h the t o hole in each o the a e ei ht

Step 3. i t each a e ei ht an rom the ottom o the ei ht in ert a U olt thro h the t o hole in each ei ht a ho n in Fi re

Figure 7 - La Out Base eig ts an U-Bolts

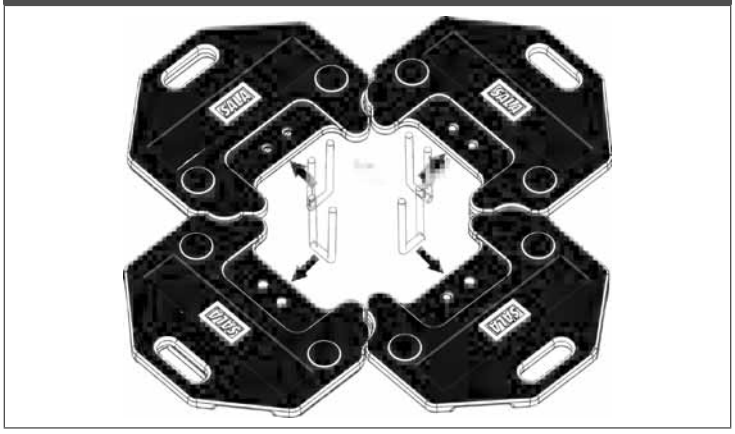

Figure - Insert U-Bolts in Base eig ts

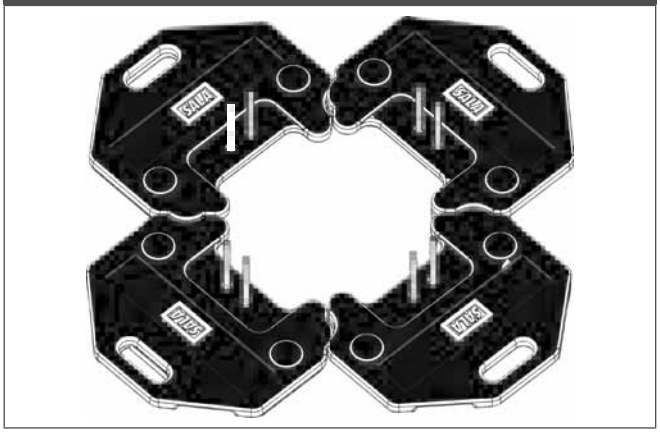

Step 4. Insert U-bolt through each corner of the base plate. Base plate must lie flat on the base weights.(See Figure 9)

Step 5. tac t o a itional ei ht on each a e ei ht ith the U olt rotr in thro h the matchin hole in each ei ht ee Fi re

Figure - Insert U-Bolts T roug Base Plate

Figure 1 - Stac T o eig ts on eac Base eig t

Step 6. Po ition the oo To nchor on the U olt an ei ht at a e ree an le to the a e late that a re io l in talle a e re each U olt a e thro h one o the mo ntin hole in the oo To nchor a e late ee Fi re

Step 7. an a itional la er o ei ht total o i teen ei ht are e in the oo To o nter ei ht nchor tem ach o the o r ei ht tac ill contain o r ei ht a e ei ht l three a itional ei ht in each tac ee Fi re

Figure 11 - Place Roo Top Anc or on U-Bolts

Figure 12 - Final La er o eig ts

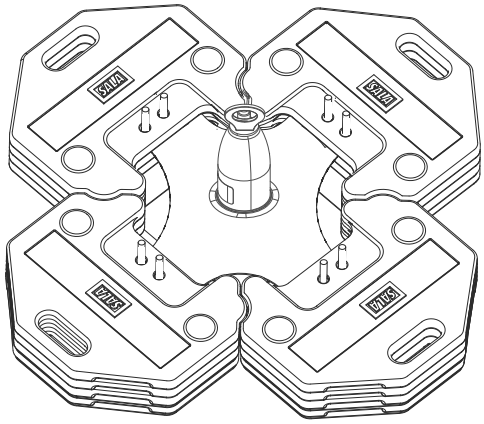

Step . Po ition each o the o r i tin it lin rac et at the en o the i tin it lin tra o er the U olt a shown in Figure 13. Each bracket flange must be positioned over the edge of the weight below it. Install a a her an a n t on each o the U olt en Ti hten all ei ht n t to t l

Step . oo a connector rate or a li tin o l or reater thro h the to o the tra a em l here the o r i tin it tra are oine n ert the connector ia onall o that t o tra are on each i e o the connector ee Fi re The oo To o nter ei ht nchor tem i no rea or tran ort e o the i tin it ee Fi re or an e am le o i tin it connection to a hoi t tem ith a e ate li tin ca acit U e ca tion hen tran ortin the tem

Figure 13 - Place Li ting Kit Brac ets on U-Bolts

Figure 14 - Rea to Transport

3.4 BODY SUPPORT: hen in the oo To o nter ei ht nchor tem it i recommen e that a ll o harne e orn For eneral all rotection e connect to the rin on the ac et een the ho l er or al rin

> *IMPORTANT: ody belts are not allowed for free fall situations. ody belts increase the ris of injury during fall arrest in comparison to a full body harness. Limited suspension time and the potential for improperly wearing a body belt may result in added danger to the user s health.*

3.5 CONNECTING TO THE ROOF TOP ANCHOR: Fi re ill trate ro er connection o t ical all arre t e i ment to the i elin in at the center o the oo To nchor l a rotect the li eline rom a ra in a ain t har or a ra i e r ace on the roo a e re all the connection are com ati le in i e ha e an tren th e er connect more than one er onal rotecti e tem to an in le oo To nchor

SRL: onnection to the in talle riatech nchor ma e ma e attachin the el loc in na hoo at the en o the li eline to the ac or al rin all arre t attachment oint o the er o ort i e ll o harne hen connectin ma e re the connection are ll clo e an loc e e ie ection i in an near har e e

Figure 15 - Connections to Roo Top Counter eig t Anc or S stem

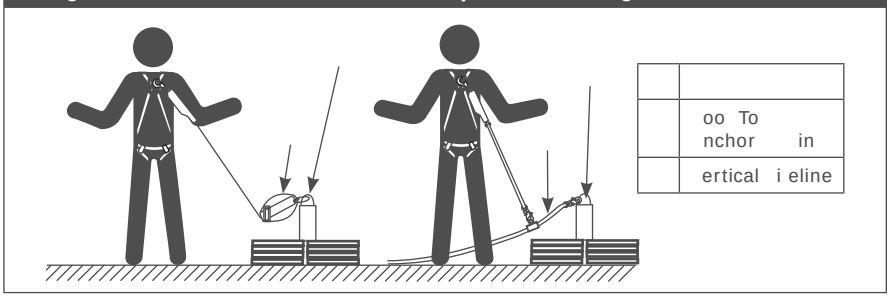

ENERGY ABSORBING LANYARDS OR LIFELINE: onnect the ener a or in en o the lan ar to the ac rin on the ll o harne ee ection ee man act rer in tr ction or more in ormation

3.6 NORMAL OPERATION: nce attache the or er i ree to mo e a o t ithin the recommen e or in area

SRL: ho l a all occ r a ee en in ra e tem ill acti ate to in the all an a or in m ch o the ener create en or ic mo ement ho l e a oi e rin the normal or o eration ince thi ma ca e the to loc

ENERGY ABSORBING LANYARD: a all occ r the ener a or er ith e lo to the all an a or m ch o the ener create

> *IMPORTANT: If the oof Top Counterweight Anchor System is subjected to the forces of arresting a fall, it must be removed from the field of service immediately and replaced or inspected by an Authorized Capital Safety Representative. See Section 5. .*

.0 INSPECTION

5.1 BEFORE EACH ANCHOR SYSTEM INSTALLATION OR HEN REPOSITIONING THE ANCHOR SYSTEM: n ect the co nter ei ht com onent an other tem com onent accor in to the e or other man act rer in tr ction tem components must be formally inspected by a Qualified Person (other than the user) at least annually. Formal inspections ho l concentrate on i i le i n o eterioration or ama e to the tem com onent tem o n to e e ecti e m t e re lace o not e com onent i in ection re eal an n a e or e ecti e con ition ecor re lt o each in ection in the *Inspection And Maintenance Log* in thi man al

5.2 INSPECTION STEPS:

Step 1. hec the co nter ei ht or e ce i e ent or e ormation hec the a e ei ht or elamination o the r er coatin the coatin ha loo e e e that ma catch or o le ac on it el the a e ei ht ho l e re lace

Step 2. n ect the nchor Po t an a e or h ical ama e oo care ll or an i n o crac ent or e ormitie in the metal the nchor ha een ecte to all arre t orce the ri ht o t ill e ti e o er to one i e o not e an nchor that ha een ecte to all arre t orce

Step 3. n ect the oo To o nter ei ht nchor tem or i n o e ce i e corro ion

Step 4. n re that the U olt an n t are in oo con ition an ti htene ec rel

Step 4. n ect the i tin it lin tra or i n o ra in or e aration

Step 5. n re the con ition o the roo ill ort the oo To o nter ei ht nchor tem loa ee ection

5.3 in ection re eal an n a e or e ecti e con ition remo e the nit rom er ice an e tro or contact or o i le re air or art re lacement

5.4 USER EQUIPMENT: n ect each tem com onent or tem i e ll o harne lan ar li eline etc er a ociate man act rer in tr ction e er to man act rer in tr ction lie ith each tem com onent or in ection roce re

.0 MAINTENANCE SER ICE STORAGE

6.1 The oo To o nter ei ht nchor tem an i tin it com onent re ire no che le maintenance other than re air or re lacement o item o n e ecti e rin in ection ee ection com onent ecome hea il oile ith rea e aint or other tance clean ith a ro riate cleanin ol tion o not e ca tic chemical that co l ama e tem com onent

.0 SPECI ICATIONS

7.1 MATERIALS:

Base eig t: er coate ca t iron
Counter eig ts: al ani e ca t iron
U- olts: al ani e teel
Li ting Kit Strap e ing: Pol e ter
Li ting Kit Strap Brac ets: inc late teel

7.2 EIGHT:

Eac Counter eig t: l
Li ting Kit: l

.0 LA ELING

.1 The e la el m t e re ent an ll le i le

On t e Roo Top Anc or ee Fi re item or la el location

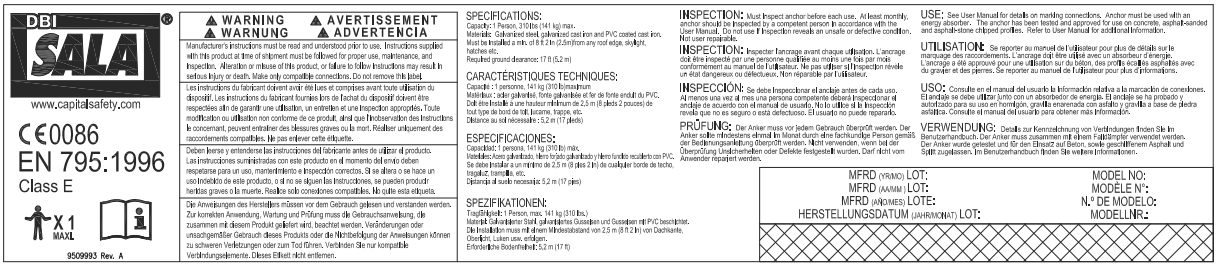

On t e Li ting Kit la el e n into one o the i tin it lin tra

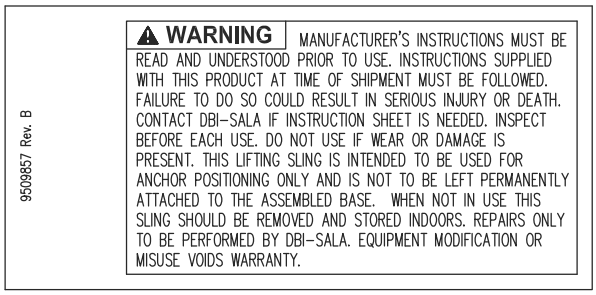

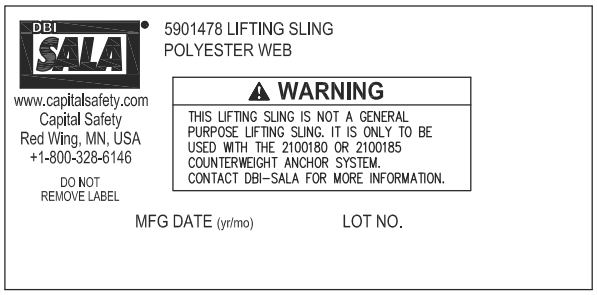

LIMITED LIFETIME ARRANTY

arrant to En User: n trie nc a P T F T U P T F T arrant to the ori inal en er n U er that it ro ct are ree rom e ect in material an or man hi n er normal e an er ice Thi arrant e ten or the li etime o the ro ct rom the ate the ro ct i rcha e the n U er in ne an n e con ition rom a P T F T a thori e i tri tor P T F T entire lia ilit to n U er an n U er e cl i e reme n er thi arrant i limite to the re air or re lacement in in o an e ecti e ro ct ithin it li etime a P T F T in it ole i cretion etermine an eem a ro riate o oral or ritten in ormation or a ice i en P T SAFETY, its distributors, directors, officers, agents or employees shall create any different or additional arrantie or in an a increa e the co e o thi arrant P T F T ill not acce t lia ilit or e ect that are the result of product abuse, misuse, alteration or modification, or for defects that are due to a failure to in tall maintain or e the ro ct in accor ance ith the man act rer in tr ction

P T F T T PP T T U T T T
PP T U P U T U F T T T P
P P T F T P U P T F
T T F T F P T U PU P T F T
PU T U T F TU U T UT T T T P F T
U P U T T F U T T P P T U
T F T U T UT T T T T T T T T T
U T U T T

DBI SALA®

The Ultimate in Fall Protection

CSG USA Latin America
a
e in
Toll Free
Phone
Fa
ol tion ca ital a et com

CSG Cana a
ort o le ar
i i a a
Phone
Toll Free
Fa
in o ca ca ital a et com

CSG Nort ern Europe
a er e oa
orth oon oat
e itch orce ter hire U

Phone
Fa
c ne ca ital a et com

CSG EMEA
Europe Mi le East A rica
e roc enter
re en e
P
arro
e roc e e
France
Phone
Fa
in ormation ca ital a et com

CSG Australia Ne Zealan
er treet
il er ater
ne
U T
Phone
Toll Free U
Toll Free
Fa
ale ca ital a et com a

CSG Asia
Singapore
nter ri e oa
in a ore
Phone
Fa
in ir ca ital a et com

Shanghai
m hina ent retech Pla a
an in i
han hai P hina
Phone
Fa

.capitalsa et .com

ISO 9001